DWG. NO.	SH	REV

REVISIONS

ZONE	REV	ECO NO.	DESCRIPTION	DATE	APPROVED
	A		PRELIMINARY RELEASE	11-94	
	B		ENGINEERING UPDATE	10-95	
	C		ENGINEERING UPDATE	1-96	
	D		ENGINEERING UPDATE	3-96	
	E		ENGINEERING UPDATE	6-96	

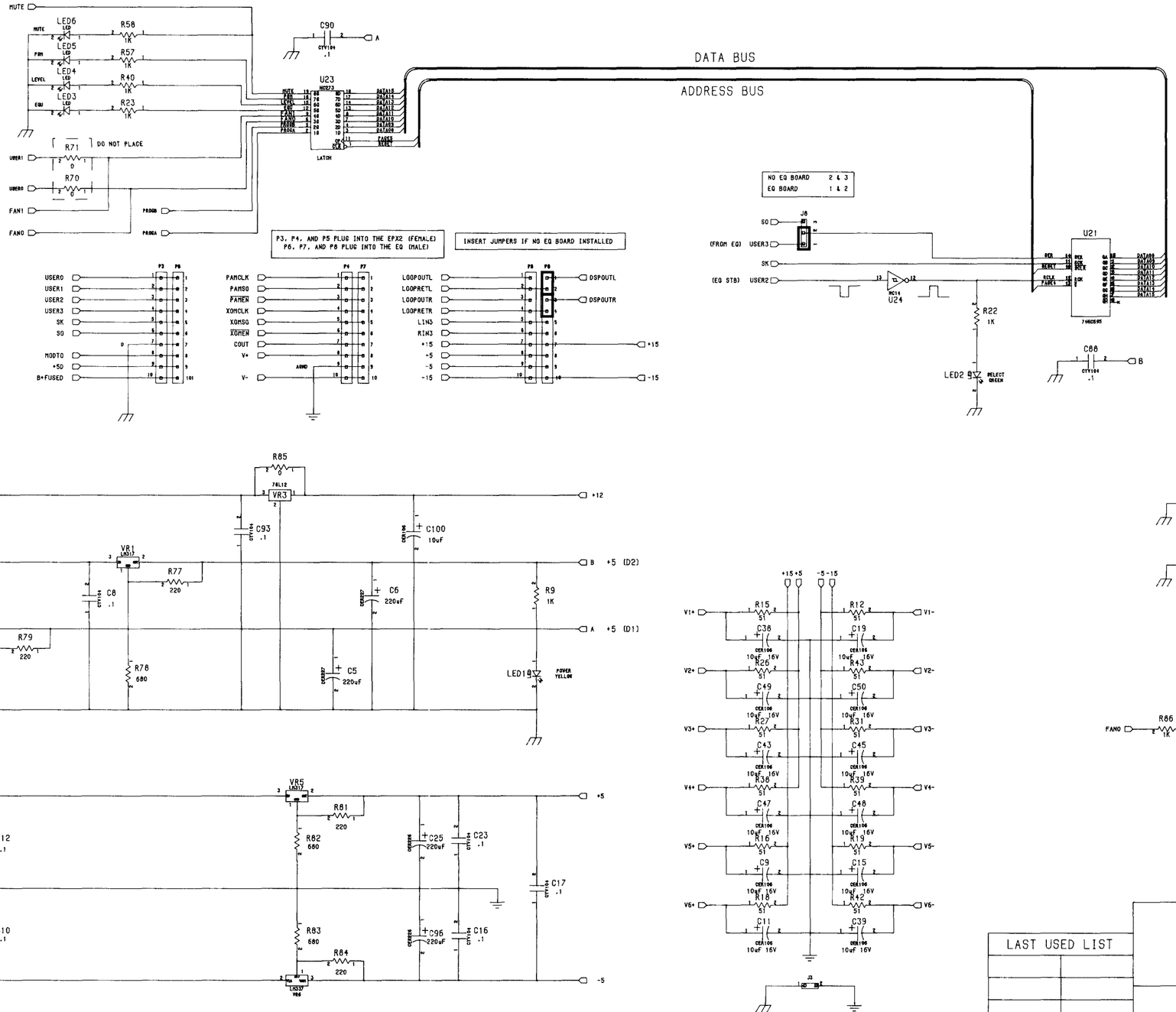

LAST USED LIST				
		DO NOT SCALE DRAWING		

	APPROVALS	DATE
DRAWN		
CHECKED		
FINISH		

ROCKFORD CORPORATION
TEMPE AZ.

TITLE
SCHEMATIC,
SYMMETRY, DSP2

SIZE	DWG NO.	
D	SCH-0921	
SCALE		SHEET 1 OF 4

DWG. NO.	SH	REV

REVISIONS

ZONE	REV	DESCRIPTION	DATE	APPROVED
	E	SEE SMT-1	6-96	

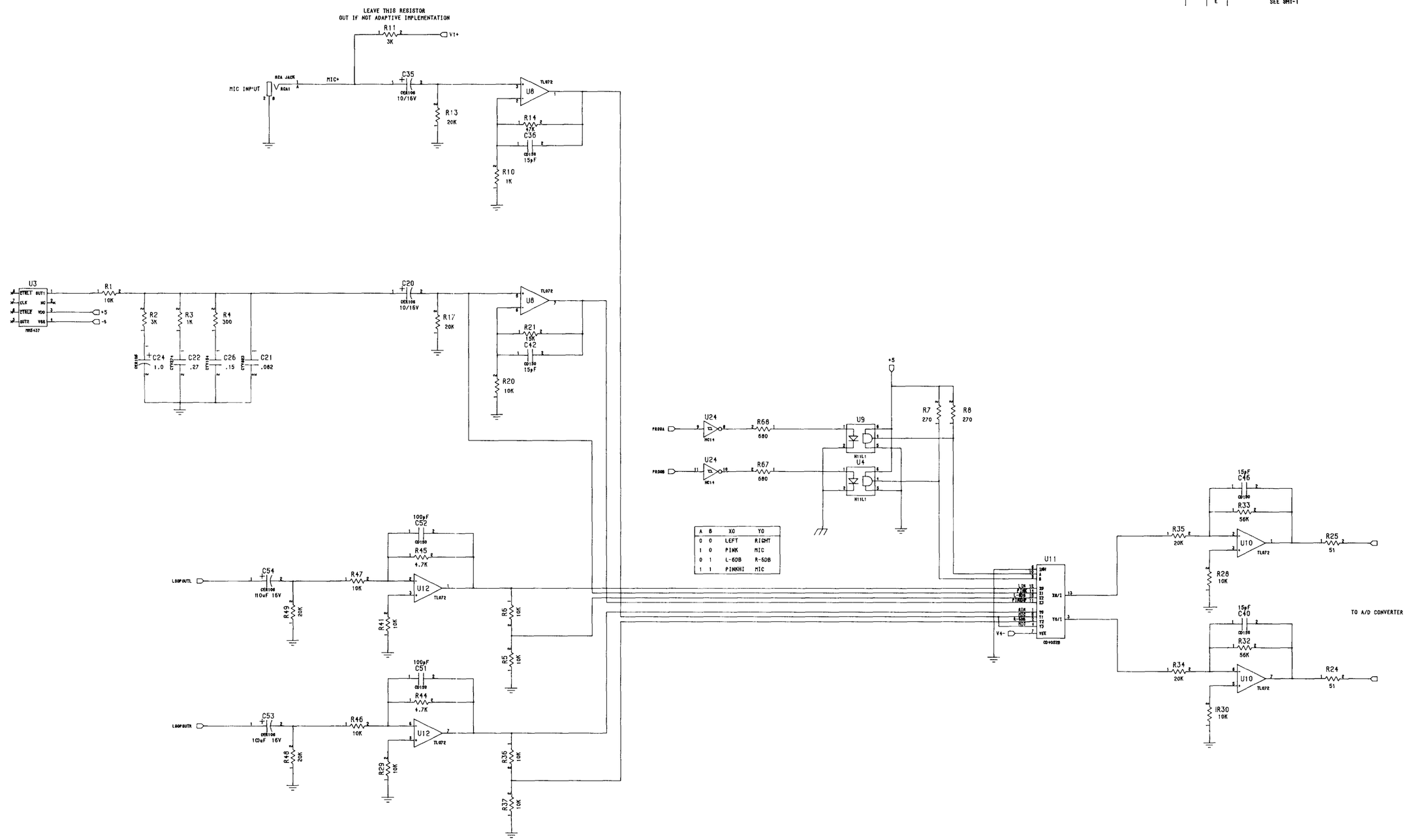

A	B	XO	YO
0	0	LEFT	RIGHT
1	0	PINK	MIC
0	1	L-6DB	R-6DB
1	1	PINKHI	MIC

ROCKFORD CORPORATION
TEMPE AZ.

APPROVALS	DATE
DRAWN	
CHECKED	
FINISH	

TITLE SCHEMATIC, SYMMETRY, DSP2

SIZE D

DWG NO. SCH-0921

SCALE

SHEET 2 OF 4

DWG. NO.	SH	REV

REVISIONS

ZONE	REV	DESCRIPTION	DATE	APPROVED
	E	SEE SHT-1	6-96	

PIN2 CONNECTED TO GND MAN ON PCB.

2=D

ADDRESS BUS

DATA BUS

ACTIVE FOR ADDRESSES BELOW 8K
DSP MUST BE LOW

OPTIONAL

EXT8 FRAME INPUT

ADDRESS DECODER
256 BYTE PAGES
ABOVE 8K BOOTROM

8 - 64 K8
BOOT MEMORY BLOCK

8 KB EEPROM
PROGRAM MEMORY BLOCK

61C65
STATIC RAM LOW
DATA MEMORY BLOCK

61C65
STATIC RAM HIGH
DATA MEMORY BLOCK

ROCKFORD CORPORATION TEMPE AZ.			
TITLE: SCHEMATIC, SYMMETRY, DSP2			
APPROVALS	DATE	SIZE: D	DWG NO.: SCH-0921
DRAWN		SCALE	SHEET 3 OF 4
CHECKED			
FINISH			

DWG. NO.	SH	REV

REVISIONS

ZONE	REV	DESCRIPTION	DATE	APPROVED
	E	SEE SHT-1	6-96	

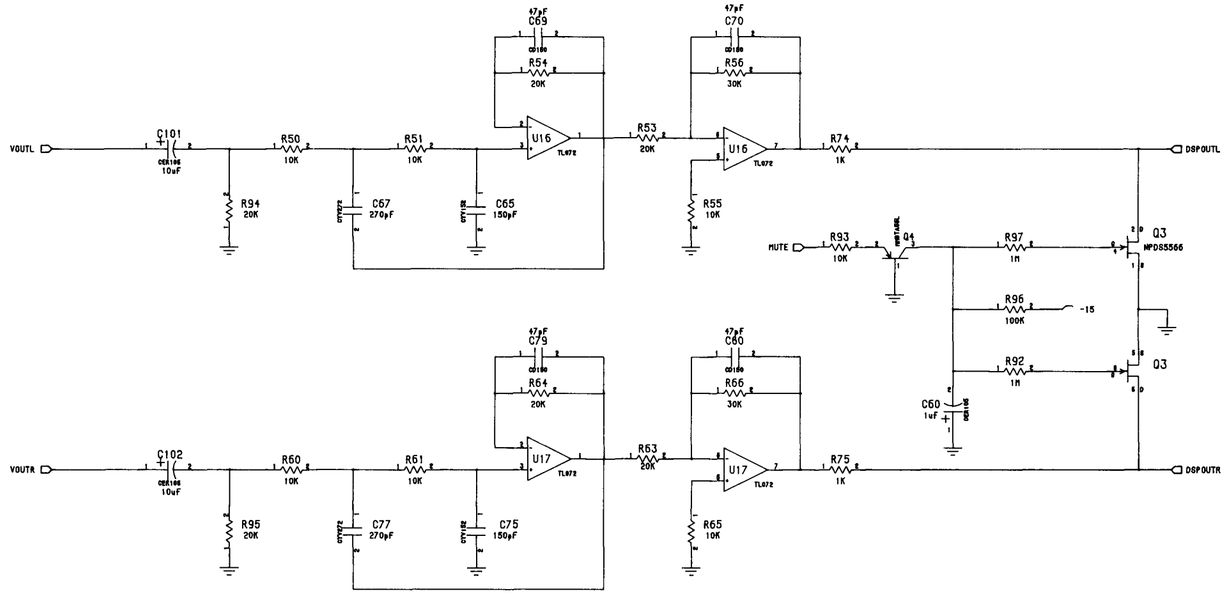

APPROVALS	DATE	ROCKFORD CORPORATION TEMPE AZ.
DRAWN		TITLE: SCHEMATIC, SYMMETRY, DSP2
CHECKED		SIZE: D — DWG NO.: SCH-0921
FINISH		SCALE — SHEET 4 OF 4